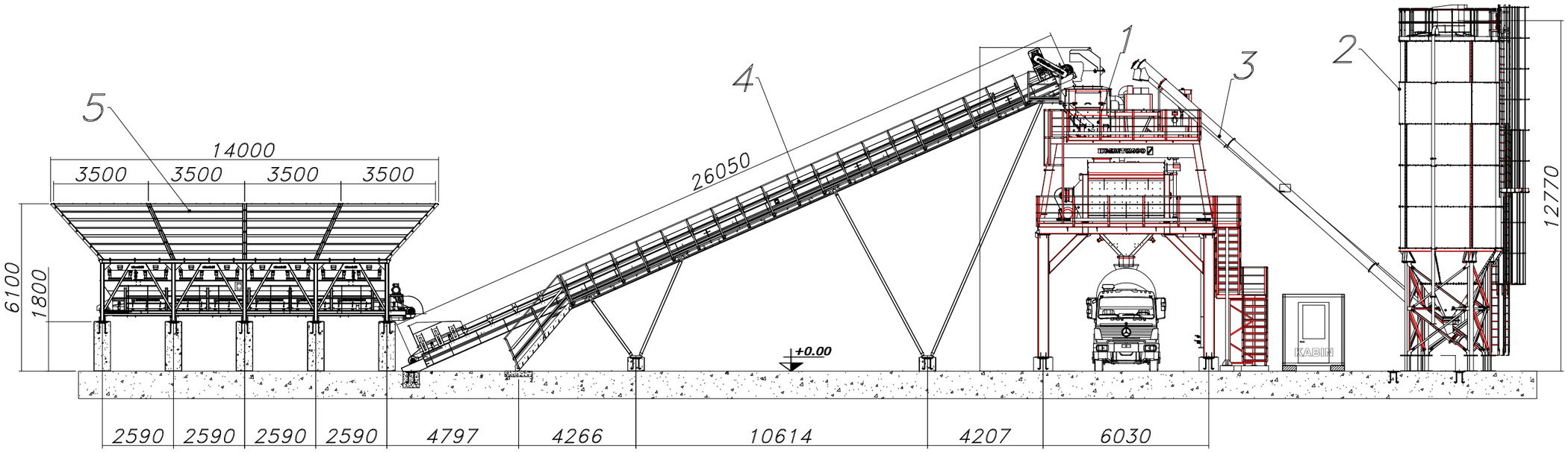

A–A SECTION

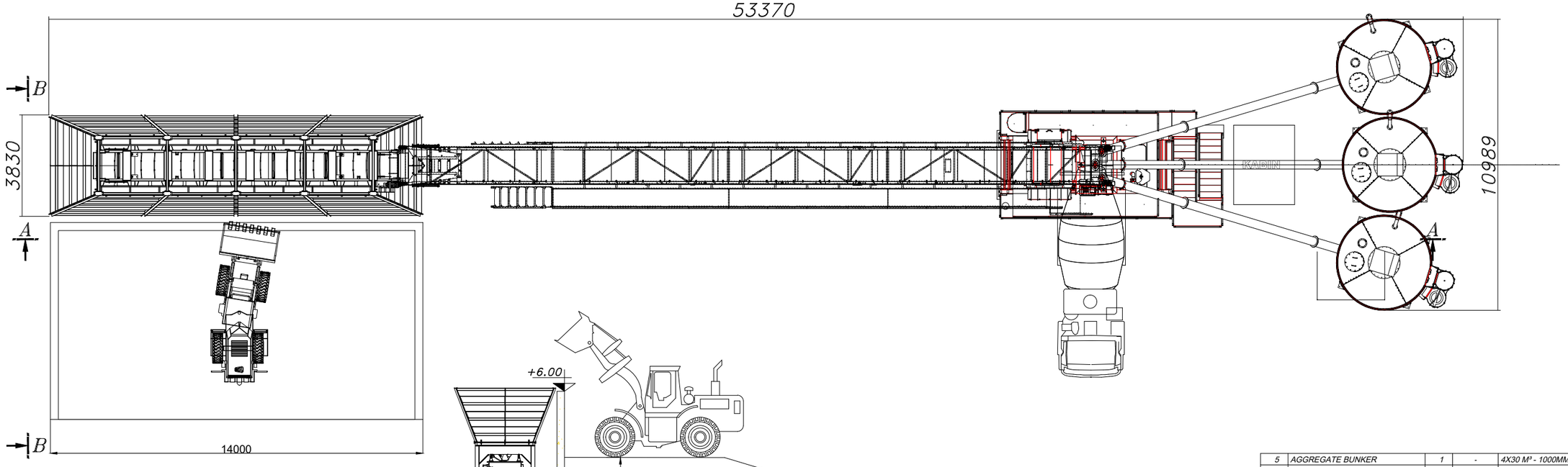

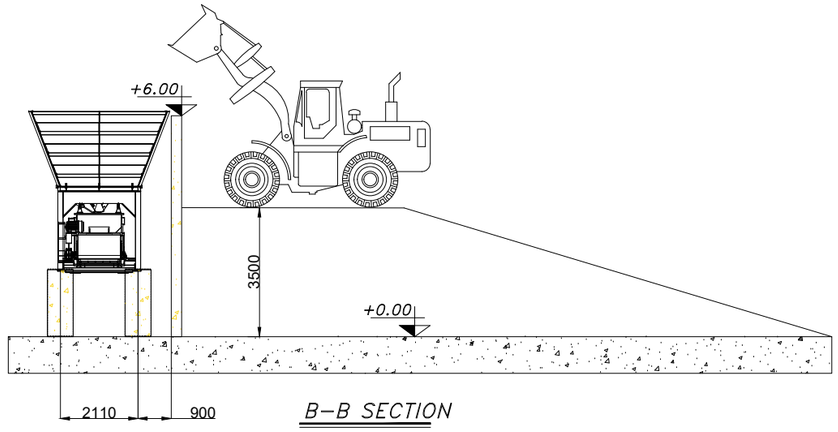

B–B SECTION

P. NO	COMPONENT NAME	QTY	METARIAL	DESCIRIPTIONS	TOTAL MASS
5	AGGREGATE BUNKER	1	-	4X30 M³ - 1000MM	-
4	BELT CONVEYOR	1	-	1000x26 M	-
3	Ø323X15000MM	3	-	SCREW CONVEYOR	-
2	100 TONS BOLTED CEMENT SILO	3	-	CEMENT SILO	-
1	STATIONARY 100	1	-	4M3 TWINSHAFT	-

CONSTMACH

company

order number

R.NO	revision	date	name

	name	signature
design		
drawn		
check		
approved		
scale	ISO E-SIZE A1	

date: 13-10-2023 capacity 160M³

plant name

CONSTMACH STAIONARY 100M3 PLANT LAYOUT

sheet name