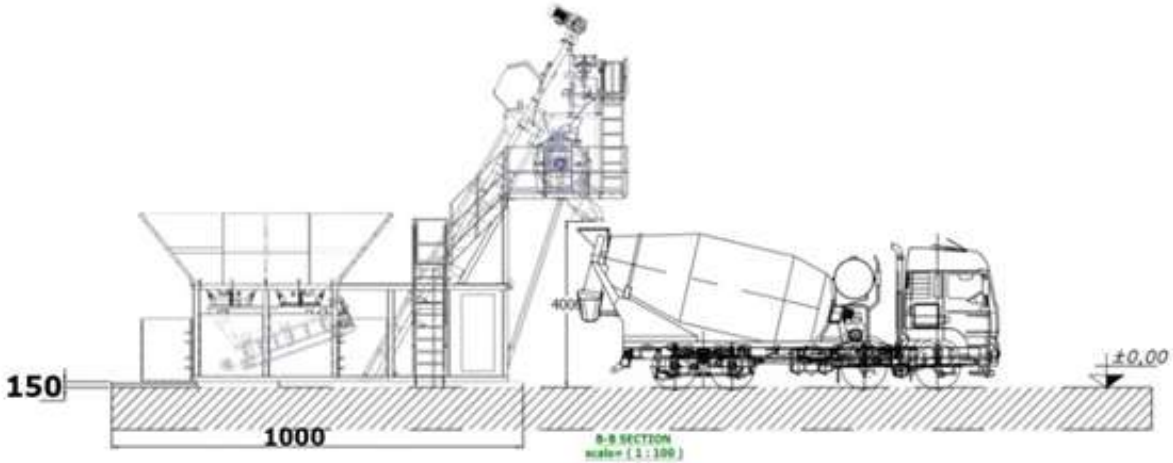

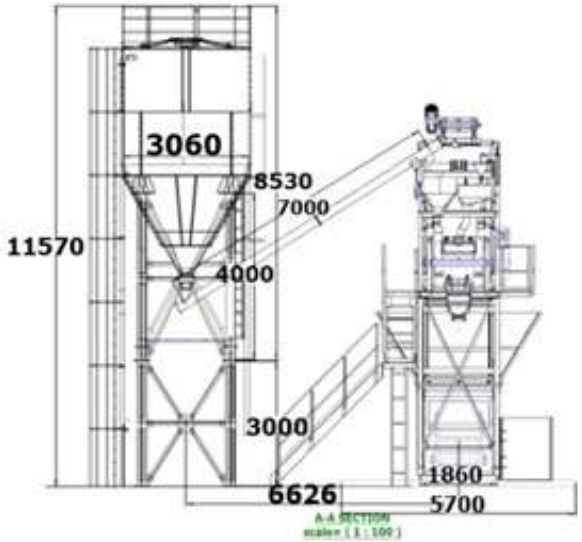

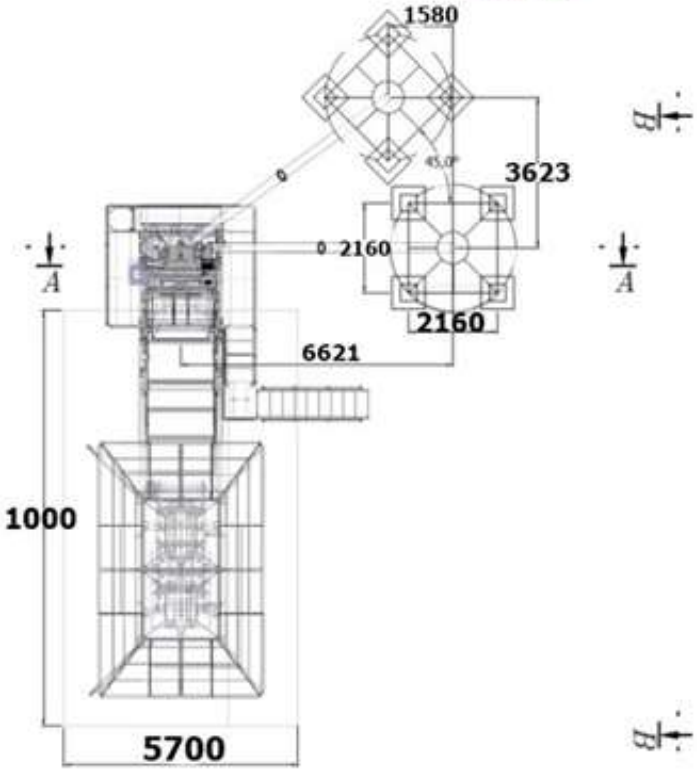

CONSTMACH

COMPACT 30 BUCKET TYPE LAYOUT